Republic of the Philippines
**SOUTHERN LUZON STATE UNIVERSITY**
Lucban, Quezon

BAGONG PILIPINAS

# REQUEST FOR QUOTATION

## FABRICATION AND INSTALLATION OF NEW TRUSSES, ROOFING WITH ENCLOSURE AT INTERNATIONAL AFFAIRS AND GRADUATE SCHOOL BUILDING (PMO)

**Purchase Request No. 2026-10-2807**
**Approved Budget for the Contract: ₱ 1,980,000.00**

The Southern Luzon State University through the Bids and Awards Committee invites interested firms/supplier to submit quotation for the procurement of **Fabrication and Installation of New Trusses, Roofing with Enclosure at International Affairs and Graduate School Building (PMO)** to apply the sum of **One Million and Nine Hundred Eighty Thousand Pesos Only (₱ 1,980,000.00) inclusive of VAT,** being the **Approved Budget for the Contract (ABC),** details as follows:

| Qty. | Unit | ITEM/S DESCRIPTION |
|---|---|---|
| 1 | lot | Fabrication and Installation of New Trusses, Roofing with Enclosure at International Affairs and Graduate School Building (IAGS) |

1. The quotation shall be submitted on or before November 9, 2026 to:
   (a) Procurement Office/BAC Office
   Southern Luzon State University
   2nd Flr. Hermano Puli Building, Quezon Ave.,
   Brgy. Kulapi, Lucban, Quezon
   **OR**
   (b) Thru email: *sisuprocurement@slsu.edu.ph*

2. Requirements for Infrastructure Projects should be submitted such as;

| | |
|---|---|
| *PhilGEPS Registration | *ITR / Tax Clearance (for 500k Above) |
| *SEC / DTI Permit | *PCAB License |
| *Mayor's / Business Permit | *List of Personnel |
| *Omnibus Sworn Statement and ID | *SPA (for authorized representative) |

3. The SLSU reserves the right to reject any or all quotations and/or proposals and waive any formalities/ informalities therein and to accept such bids it may consider as most advantageous to the agency and to the government. Southern Luzon State University SLSU neither assumes any obligation for whatsoever losses that may be incurred in the preparation of bids, nor does it guarantee that an award will be made.

**MARIDEL C. ZABELLA, JD**
Director, Procurement Office
Southern Luzon State University
Lucban, Quezon
Tel. No.: (042)540-6519

Republic of the Philippines
SOUTHERN LUZON STATE UNIVERSITY
Lucban, Quezon

# REQUEST FOR QUOTATION

| | | | |
|---|---|---|---|
| **Office/End-User:** | **Project Management Office** | **Date:** | |
| **COMPANY NAME:** | | **PR No.:** | **2026-10-2807** |
| **ADDRESS :** | | | |
| **TEL. NO./FAX NO. :** | | **TIN No.:** | |

Please quote your lowest price on the item(s) listed below, subject to the Terms & Conditions stated below and submit your quotation duly signed by your representative not later than _____ of _____ in the return envelope attached herewith to the Procurement office.

*TERMS and CONDITIONS*

1. *All entries must be typewritten or legibility written.*
2. *Delivery period within _____ upon conforme of the approved Purchase Order (P.O). Administratitive penalties to Sec. 69 of the Revised IRR-RA 1984 shall be imposed for non-delivery without valid reason.*
3. *Warranty shall be for a minimum of three (3) months for Supplies & Materials; (1) one year for Equipment from date of acceptance by the end-user.*
4. *Price validity shall be for a period of sixty (60) calendar days.*
5. *Suppliers required to submit updated documents yearly such as G-EPS Resgistration, Certificate of Tax, Mayor'sPermit, DTI, Bank Name/Account and Branch for evaluation of the Procurement Office upon submission of the quotation.*
6. *Bidders shall submit complete specifications showing products certification, if applicable.*
7. *Please indicate the brand for each items being offered.*
8. *The Approved budget celling for this procurement is PHP 1,980,000.00.*

**MARIDEL C. ZABELLA**
**Director, Procurement Office**

| Item # | Qty. | Unit | ITEM/S DESCRIPTION | Unit Price | Total Cost |
|---|---|---|---|---|---|
| | 1 | lot | Fabrication and Installation of New Trusses, Roofing with Enclosure at International Affairs and Graduate School Building (IAGS) | | |
| | | | | | |
| | | | | | |
| | | | | | |
| | | | | | |
| | | | | | |
| | | | | | |
| | | | | | |
| | | | | | |
| | | | | | |
| | | | | | |
| | | | | | |
| | | | | | |
| | | | | | |
| | | | | | |
| | | | | | |
| | | | | | |
| | | | | | |
| | | | | | |
| | | | | | |
| | | | | | |
| | | | | | |
| | | | | | |
| | | | | | |
| | | | | | |
| | | | | | |
| | | | | | |

Source of Fund: **PRE STF** Warranty:
Delivery Period: **90 DAYS** Price Validity:

*After having carefully need & accepted your Genaral Conditions, We quote you on the item(s) at prices note above. If the space of providec on the Delivery Period, Warranty & Price Volidity are left blank, it means that I concur w/ the Terms & Conditions specified by SLSU Procurement Office.*

_____
Printed Name/Signature/Date

Republic of the Philippines
SOUTHERN LUZON STATE UNIVERSITY
Project Management Office
Lucban , Quezon

**PROJECT TITLE:** FABRICATION AND INSTALLATION OF NEW TRUSSES AND ROOFING WITH ENCLOSURE AT INTERNATIONAL AFFAIRS AND GRADUATE SCHOOL BUILDING (IAGS)
**PROJECT LOCATION:** SLSU Main Campus, Lucban Quezon
**OWNER :** SLSU-MAIN CAMPUS
**ABC :** P 1,980,000.00
**PROJECT DURATION :** 90 CD

INFRA

**PROJECT BRIEF DESCRIPTION :** The project involves the fabrication and installation of new roof trusses, roofing system, and enclosure at the International Affairs and Graduate School (IAGS) Building. It aims to address water leakage caused by the existing exposed roof slab, improve weather protection, and enhance the building's functionality, usability, and overall serviceability.

**SUMMARY**

| ITEM | DESCRIPTION | COST OF MATERIALS | COST OF LABOR AND EQUIPMENT | TOTAL |
|---|---|---|---|---|
| I | General Works | | | |
| II | Demolition and Dismantling Works | | | |
| III | Tinsmithry Works (Roofing Works) | | | |
| IV | Scaffolding and Formworks | | | |
| V | Roof Framing/Steel Works | | | |
| VI | Plumbing Works | | | |
| XII | Miscellaneous Repair Works | | | |
| | | | ***TOTAL ESTIMATED DIRECT COST*** P | |
| **INDIRECT COST** | | | *OVERHEAD, CONTINGENCIES & MISC.( OCM )* P | |
| | | | *CONTRACTOR'S PROFIT* P | |
| | | | *VALUE ADDED TAX ( VAT )* P | |
| | | | ***TOTAL PROJECT COST*** P | |

TOTAL PROJECT COST IN WORDS: _____

_____

CONTRACTOR/BIDDER: _____

_____

Republic of the Philippines
SOUTHERN LUZON STATE UNIVERSITY
Project Management Office
Lucban , Quezon

**PROJECT TITLE:** FABRICATION AND INSTALLATION OF NEW TRUSSES AND ROOFING WITH ENCLOSURE AT INTERNATIONAL AFFAIRS ANDGRADUATE SCHOOL BUILDING (IAGS)
**PROJECT LOCATION:** SLSU Main Campus, Lucban Quezon
**OWNER :** SLSU-MAIN CAMPUS
**MODE OF IMPLEMENTATION :** by Contract
**PROJECT DURATION:** 90 CD
**PROJECT BRIEF DESCRIPTION :** The project involves the fabrication and installation of new roof trusses, roofing system, and enclosure at the International Affairs and Graduate School (IAGS) Building. It aims to address water leakage caused by the existing exposed roof slab, improve weather protection, and enhance the building's functionality, usability, and overall serviceability.

## BILL OF MATERIALS

**I. General Works**

| Quantity | Unit | Description | Unit Cost | Total Cost |
|---|---|---|---|---|
| 1 | lot | Mobilization / Demobilization | | |
| 1 | lot | Project Identification, signs & all necessary permitting | | |
| 1 | lot | Temporary Facilities and Enclosure | | |
| 1 | lot | Safety Program and Policy | | |
| | | | **Sub - Total** | **P** |

**II. Demolition and Dismantling Works**

| Quantity | Unit | Description | Unit Cost | Total Cost |
|---|---|---|---|---|
| | sqm. | Existing Parapet *(See Attached Detailed Plan)* | | |
| | sq.ft. | Dismantling of Existing Roof *(Roof Sheet Only, 645 sq.ft.)* | | |
| 1 | lot | Temporary Dismantling & Re-installing of Solar Panels and Frames | | |
| | | | **Sub - Total** | **P** |

**III. Tinsmithry Works (Roofing Works)**

| Quantity | Unit | Description | Unit Cost | Total Cost |
|---|---|---|---|---|
| | pcs | 1/2" thk x 300mm x 2.40m long Fascia Board *(80.51 ln.m.)* | | |
| | ft. | Long Span Rib-Type Pre-painted 0.5thk x 1.05 width *(3787.37sq.ft)* | | |
| | pcs | 0.50mm THK x 0.60m x 2.40m Stainless Gutter *(27.91 ln.m.)* | | |
| | pcs | 0.50mm THK x 0.60m x 2.40m Roof End Flashing *(58.2 ln.m.)* | | |
| | pcs | 0.50mm THK x 0.90m x 2.40m Wall Cap & Wall Flashing *(24 ln.m.)* | | |
| 1 | lot | Consumables *(Tekscrew, Sealant, Welding Rod, cutting disc,etc.)* | | |
| | | | **Sub - Total** | **P** |

**iV. Scaffolding and Formworks**

| Quantity | Unit | Description | Unit Cost | Total Cost |
|---|---|---|---|---|
| 1 | lot | Scaffolding and Formworks | | |
| | | | **Sub - Total** | **P** |

| V. Roof Framing/Steel Works | | | | |
|---|---|---|---|---|
| Quantity | Unit | Description | Unit Cost | Total Cost |
| | pcs | 1.5mm.THK x 2" x 4" C-Purlins | | |
| | pcs | 6mm. THK. X 2" x 8" Channel Bar | | |
| | pcs | Angle Bar 2 1/2" x 2 1/2" x 6.00mm thk, 6.0m | | |
| | pcs | Angle Bar 2" x 2" x 6.00mm thk, 6.0m | | |
| | pcs | 40cm x 40xm Steel Base Plate, 10mm thk | | |
| | pcs | Expansion Bolt Ø16mm | | |
| | pcs | L-Type Archor Bolt with nut and washer, 20mm Ø | | |
| | box | Welding Rod, 2.5kg | | |
| | gal | Epoxy Primer gray with Catalyst | | |
| | gal | Lacquer Thinner | | |
| 1 | lot | Consumables | | |
| | | | **Sub - Total** | **P** |

| VI. Plumbing Works | | | | |
|---|---|---|---|---|
| Quantity | Unit | Description | Unit Cost | Total Cost |
| | sets | 3" Stainless Rood Drain with Basket Strainer | | |
| | pcs. | 3" dia. Drainage Pipe | | |
| | pcs. | 3" dia. PVC Elbow | | |
| 1 | lot | Consumables | | |
| | | | **Sub - Total** | **P** |

| VII. Miscellaneous Repair Works | | | | |
|---|---|---|---|---|
| Quantity | Unit | Description | Unit Cost | Total Cost |
| 1 | lot | Miscellaneous Repair Works | | |
| | | | **Sub - Total** | **P** |



Republic of the Philippines
Southern Luzon State University
Project Management Office
Lucban, Quezon

**PROJECT TITLE :** FABRICATION AND INSTALLATION OF NEW TRUSSES AND ROOFING WITH ENCLOSURE AT INTERNATIONAL AFFAIRS AND GRADUATE SCHOOL BUILDING (IAGS)
**PROJECT LOCATION :** SLSU Main Campus, Lucban Quezon
**OWNER :** SLSU-MAIN CAMPUS
**PROJECT DURATION :** 90 CD
**SUBJECT :** Scope of Works/ Specifications

## SCOPE OF WORKS/SPECIFICATIONS

### I. GENERAL WORKS

- Provide labor, equipment, tools, and transportation necessary for project mobilization and demobilization.
- Provide and install required project identification signs and secure all necessary permits and clearances.
- Establish temporary facilities, site enclosures, and necessary provisions for project operations.
- Implement required health and safety measures, including protective equipment, warning signs, and compliance with applicable safety regulations.

### II. DEMOLITION AND DISMANTLING WORKS

- Carefully demolish and remove the existing parapet in accordance with the approved detailed plan, including hauling and proper disposal of debris. After Demolition, ask for the actual inspection of Project Architect/Engineer to verify the non visible parts of the as built.
- Dismantle the existing roof sheeting only, preserving the existing roof framing and other structural components for reuse. After Dismantling, ask for the actual inspection of Project Architect/Engineer to verify the non visible parts of the as built.
- Carefully dismantle, secure, and store the existing solar panels and supporting frames, then reinstall them upon completion of the necessary works. After Dismantling, ask for the actual inspection of Project Architect/Engineer to verify the non visible parts of the as built.

### III. FORMWORKS AND SCAFFOLDINGS

- The work includes the construction and installation of formworks and scaffolding, fabrication of column and beam forms and erection of the forms and scaffolding and dismantling & stripping of forms.
- The work under this project shall include the furnishing of all materials, labor, tools, equipment and other facilities and construction necessary as on the plans and in accordance with the specifications.
- Making sure the proper installation of scaffoldings for the safety.

### IV. ROOF FRAMING/STEEL WORKS

- The scope of work under this section consists of furnishing of all labor, tools, equipment and performance of all operations relative to fabrication, delivery to site, erection and painting of steel trusses and purlins as shown on the approved plans.

- Fabrication of steel trusses, installation of roof frame, pre-painted Ribbed type roof, cap flashing, gutter and other roof accessories.
- Weld all shop assembled connections continuous without undercut and or distortion of handrails
- Grind and or dress exposed welds smoothly and flush to corner or fillet without weakening connection.
- Lightly sand and blend with fine grit paper all light scratches prior to finishing.
- Splices and expansion joints shall utilize internal splice connectors with set screws to allow for expansion over ambient temperature change.

## V. ROOFING'S TINSMITHRY WORKS

- Supply and install 1/2-inch thick × 300 mm wide × 2.40 m long fascia boards, including proper fastening and alignment. See attached detailed shop drawings.
- Supply and install long-span pre-painted roofing sheets, including proper fastening, alignment, and weatherproofing.
- Supply and install 0.50 mm thick × 0.60 m wide × 2.40 m long stainless steel gutters, including proper slope and secure connections for efficient drainage. See attached detailed shop drawings.
- Supply and install 0.50 mm thick × 0.60 m × 2.40 m roof end flashing, including proper fitting and sealing to prevent water infiltration. See attached detailed shop drawings.
- Supply and install 0.50 mm thick × 0.90 m wide × 2.40 m long wall cap and flashing, including proper fastening, joints, and weatherproof sealing. Verify actual for the actual width of the bended accessories.
- Provide all necessary accessories and consumables, including Tek screws, sealants, welding rods, cutting discs, and other materials required for proper installation and completion of the works.
- All works shall conform to the approved plans, specified dimensions, manufacturer's recommendations, and applicable construction standards.
- Ensure the proper installation of sealant and all necessary water proofing to prevent leakage

## VI. SANITARY & PLUMBING WORKS

### GENERAL

- All plumbing works included herein shall be executed according to the provision of the National Plumbing Code of the Philippines, National Building Code and the rules and regulation of the city/province.
- Supply and installations of all plumbing pipes, drains and other plumbing connections.
- Supply & installations of sewer pipe line and water drain.
- Making sure the connection of downspouts to existing Catch basin.
- All materials and equipment to be installed shall be approved quality and should be presented to Southern Luzon State University/Representative Engineer for approval prior to installation.
- All materials shall be new and shall conform to the reference Code and Standard. Use of materials shall furfure be governed by other requirements, imposed on the specification. Materials shall be subjected to test, if necessary, for their fitness if so required.

## VII. MISCELLANEOUS REPAIR WORKS

Carry out minor and incidental repairs to existing building components as necessary, including patching, sealing, adjustments, replacement of minor damaged parts, and restoration of affected surfaces. All works shall include the necessary labor, materials, tools, and equipment to ensure

proper workmanship and restore the functionality and serviceability of existing components, subject to the approval of the project representative.

- Concrete Surface Repairs – Patch minor cracks, spalled concrete, and damaged surfaces affected by roof installation.
- Structural Connection Repairs – Repair minor damaged connection points, anchor bolts, welds, and metal brackets, subject to approval and verification of structural adequacy.
- Debris Removal and Final Restoration – Remove repair debris, clean affected areas, and restore disturbed surfaces to their original condition.

Prepared by:

**Archt. Johnrick S. Obiena**
Architect-Project Management Office

Reviewed by:

**Engr. Joel E. Morales**
Project Development Officer I

Recommending Approval:

**Engr. Melvin A. Makipagay**
Director, Project Management Office

Approved by:

**Dr. Frederick T. Villa**
University President

Republic of the Philippines
SOUTHERN LUZON STATE UNIVERSITY
Project Management Office
Lucban, Quezon

**PROJECT :** FABRICATION AND INSTALLATION OF NEW TRUSSES AND ROOFING WITH ENCLOSURE AT INTERNATIONAL AFFAIRS ANDGRADUATE SCHOOL BUILDING (IAGS)
**Location** SLSU Main Campus, Lucban Quezon
**Owner :** SLSU-MAIN CAMPUS
**Mode of Implementation :** by Contract
**Project Duration :** 90 CD

## GANTT CHART/CONSTRUCTION SCHEDULE

| Item | Description | Duration (days) | Duration (Days) | | | | | | | | |
|---|---|---|---|---|---|---|---|---|---|---|---|
| | | | 10 | 20 | 30 | 40 | 50 | 60 | 70 | 80 | 90 |
| I | GENERAL WORKS | | | | | | | | | | |
| | Mobilization/Demobilization | | | | | | | | | | |
| II | DEMOLITION AND DISMANTLING WORKS | | | | | | | | | | |
| | Demolition of Existing Parapet | | | | | | | | | | |
| | Dismantling of Existing Roof Sheets, Solar Panels and its Frames | | | | | | | | | | |
| III | FORMWORKS AND SCAFFOLDS | | | | | | | | | | |
| | Supply and Installation of Formworks and Scaffoldings | | | | | | | | | | |
| IV | ROOF FRAMING/STEEL WORKS | | | | | | | | | | |
| | Fabrication and Installation of Steel Frames and other Steel Works | | | | | | | | | | |
| V | ROOFING TINSMITHRY WORKS | | | | | | | | | | |
| | Supply and Installation of Roof Sheets and all bended accessories | | | | | | | | | | |
| VI | PLUMBING WORKS | | | | | | | | | | |
| | Supply & Installation of Storm Drainage Pipes | | | | | | | | | | |
| VII | MISCELLANEOUS REPAIR WORKS | | | | | | | | | | |
| | Miscellaneous repair works | | | | | | | | | | |

Prepared by:

**Archt. Jommick S. Oblena**
Architect - Project Management Office

Recommending Approval:

**Engr. Melvin A. Maldpagay**
Director, Project Mangement Office

Reviewed By:

**Engr. Joel E. Morales**
Project Development Officer I

Approved by :

**Frederick T. Villa, DT**
University President

Republic of the Philippines
Southern Luzon State University
Project Management Office
Lucban, Quezon

**PROJECT TITLE:** FABRICATION AND INSTALLATION OF NEW TRUSSES AND ROOFING WITH ENCLOSURE AT INTERNATIONAL AFFAIRS AND GRADUATE SCHOOL BUILDING (IAGS)
**PROJECT LOCATION:** SLSU Main Campus, Lucban Quezon
**OWNER:** Southern SLSU-MAIN CAMPUS
**PROJECT DURATION:** 90 Working Days
**SUBJECT:** Minimum Technical Personnel and Equipment

## MINIMUM TECHNICAL PERSONNEL AND EQUIPMENT

| QUANTITY | MINIMUM TECHNICAL PERSONNEL |
|---|---|
| 1 | Project Manager/ Project Architect/Engineer |
| 1 | Foreman |
| 3 | Skilled Worker |
| 7 | Laborers |

| QUANTITY | MINIMUM EQUIPMENT |
|---|---|
| 1 unit | Cut – Off Machine |
| 1 unit | Welding Machine |
| 1 unit | Demolition Hammer |

Prepared by:

**ARCHT. JOHNRICK S. OBLENA**
ARCHITECT

Recommending approval:

**ENGR. MELVIN A. MAKIPAGAY**
Director, Project Management Office

Reviewed by:

**ENGR. JOEL E. MORALES**
Project Development Officer I

Approved by:

**FREDERICK T. VILLA, DT**
University President

## LEGEND:

1. SUPPLY WAREHOUSE
2. SUPPLY OFFICE
3. PRINTING PRESS
4. MELCHORA AQUINO BLDG.
5. CIT MULTI PURPOSE HALL
6. HERMANO PULE BLDG.
7. COMFORT ROOM 1
8. CAM LEARNING RESOURCE CENTER
9. CAS STUDY CENTER
10. JOSE P. RIZAL BLDG.
11. HERMANO PULE SHRINE AND PARK
12. GATE 1 / GUARD HOUSE
13. PSYCHOLOGY BLDG.
14. GUARD HOUSE/CSSU OFFICE
15. CHAPEL
16. CABHA BLDG.
17. GOMBURZA BLDG.
18. ICT BLDG.
19. ADMINISTRATION BLDG
20. GATE 3
21. BUSINESS RESOURCE CENTER
22. SOCCER FIELD
23. GRANDSTAND
24. POWER HOUSE
25. INTERNATIONAL AFFAIRS AND GRADUATE SCHOOL BLDG.
26. GATE 4
27. SCIENCE AND TECHNOLOGY BLDG.
28. LIBRARY
29. RADIO AND TV BROADCASTING STATION
30. LABORATORY HIGH SCHOOL COMPUTER LAB.
31. JUAN LUNA/ CTE BLDG.
32. SCIENCE AND TECHNOLOGY LABORATORY BLDG.
33. SENIOR HIGH BLDG
34. REPDI COMPLEX ( 7 STOREY GREEN BUILDING )
35. LABORATORY HIGHSCHOOL FACULTY
36. LABORATORY HIGHSCHOOL CANTEEN
37. LHS BLDG.
38. TENNIS COURT
39. LABORATORY HIGH SCHOOL CLASSROOM
40. LES BLDG / NEW ZEALAND CREAMERY BLDG.
41. DORMITORY
42. COMFORT ROOM 3
43. GYMNASIUM
44. COVERED COURT
45. ALUMNI BLDG.
46. HARDWARE STORAGE
47. MINI POWER PLANT
48. COE LABORATORY
49. MARCELO H DEL PILAR BLDG.
50. ANDRESS BONIFACIO BLDG.
51. TECHNICAL LABORATORY BLDG.
52. AUTOMOTIVE LABORATORY
53. COMFORT ROOM 4
54. STUDENT CENTER
55. RFID GATE
56. BIRTHING CENTER
57. ELEVATED WATER TANK
58. NSTP HEADQUARTER
59. SUPPLY STOCK ROOM
60. FACULTY AND EMPLOYEE BLDG
61. COLLEGE OF MEDICINE
62. COLLEGE OF ALLIED MEDICINE ANNEX
63. LICUP BLDG
64. LABORATORY FIELD
65. CAS STUDY AREA
66. MRF / TSD FACILITY
67. GATE 5
68. PROPOSED POWERHOUSE 2
69. ACADEMIC BLDG. FOR CLASSROOMS AND LEARNING CENTER
70. CAS FACULTY BUILDING
71. PDO-PPF-PMT BLDG
72. TWIN BUILDING TOWER FOR COLLEGE OF ENGINEERING COLLEGE OF INDUSTRIAL TECH.
73. PROPOSED DORMITORY 2
74. COMFORT ROOM
75. BAO STALL
76. MOTORCYCLE PARKING
77. WASTE WATER TREATMENT FACILITY
78. UDRRMO/UCMART/ICS BLDG




A VICINITY MAP
A-1 SCALE NTS.

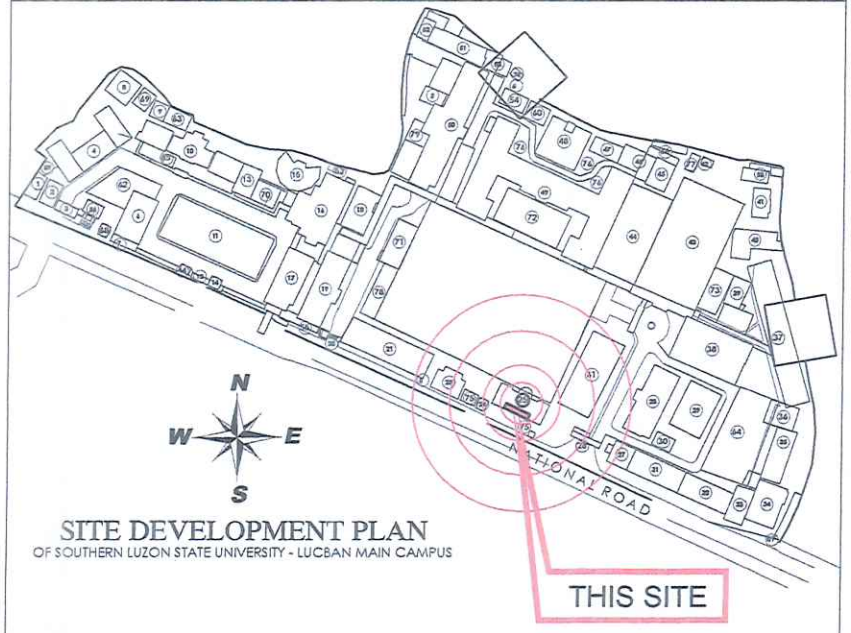


SITE DEVELOPMENT PLAN
OF SOUTHERN LUZON STATE UNIVERSITY - LUCBAN MAIN CAMPUS





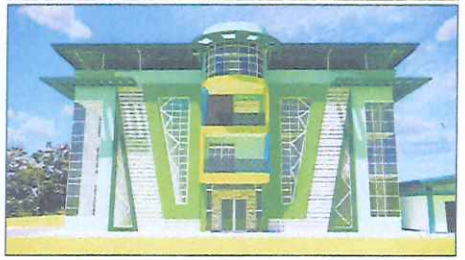





Republic of the Philippines
Municipality of Lucban
Province of Quezon

OFFICE OF THE BUILDING OFFICIAL

LUCBAN, QUEZON

LAND USE AND ZONING

LINE AND GRADE

ARCHITECTURAL

STRUCTURAL

SANITARY

ELECTRICAL

MECHANICAL

| ARCHITECT: | PROJECT TITLE | PLANNED BY: | REVIEWED BY: | RECOMMENDING APPROVAL: | APPROVED BY: | SHEET CONTENT: | SHEET # |
|---|---|---|---|---|---|---|---|
| PRC # : TIN # : PTR # : DATE ISSUED : PLACE ISSUED : | FABRICATION AND INSTALLATION OF NEW TRUSSES AND ROOFING WITH ENCLOSURE AT INTERNATIONAL AFFAIRS AND GRADUATE SCHOOL BUILDING (IAGS) | AR. JOHNRICK S. OBLENA, uap ARCHITECT PRC # : 0064696 TIN # : 687827191000 PTR # : 5248282 DATE ISSUED : 03/05/2026 PLACE ISSUED : SAMPALOC, QUE. UAP/APO# 0 042620 071425 | PRC # : TIN # : PTR # : DATE ISSUED : PLACE ISSUED : | ENGR. MELVINA MAKIPAGAY DIRECTOR, PROJECT MANAGEMENT OFFICE | FREDERICK T. VILLA, DT UNIVERSITY PRESIDENT | PERSPECTIVE<br>VICINITY MAP<br>LEGENDS<br>SITE DEVELOPMENT PLAN | A-1 |

ADDRESS: SLSU MAIN CAMPUS, LUCBAN, QUEZON

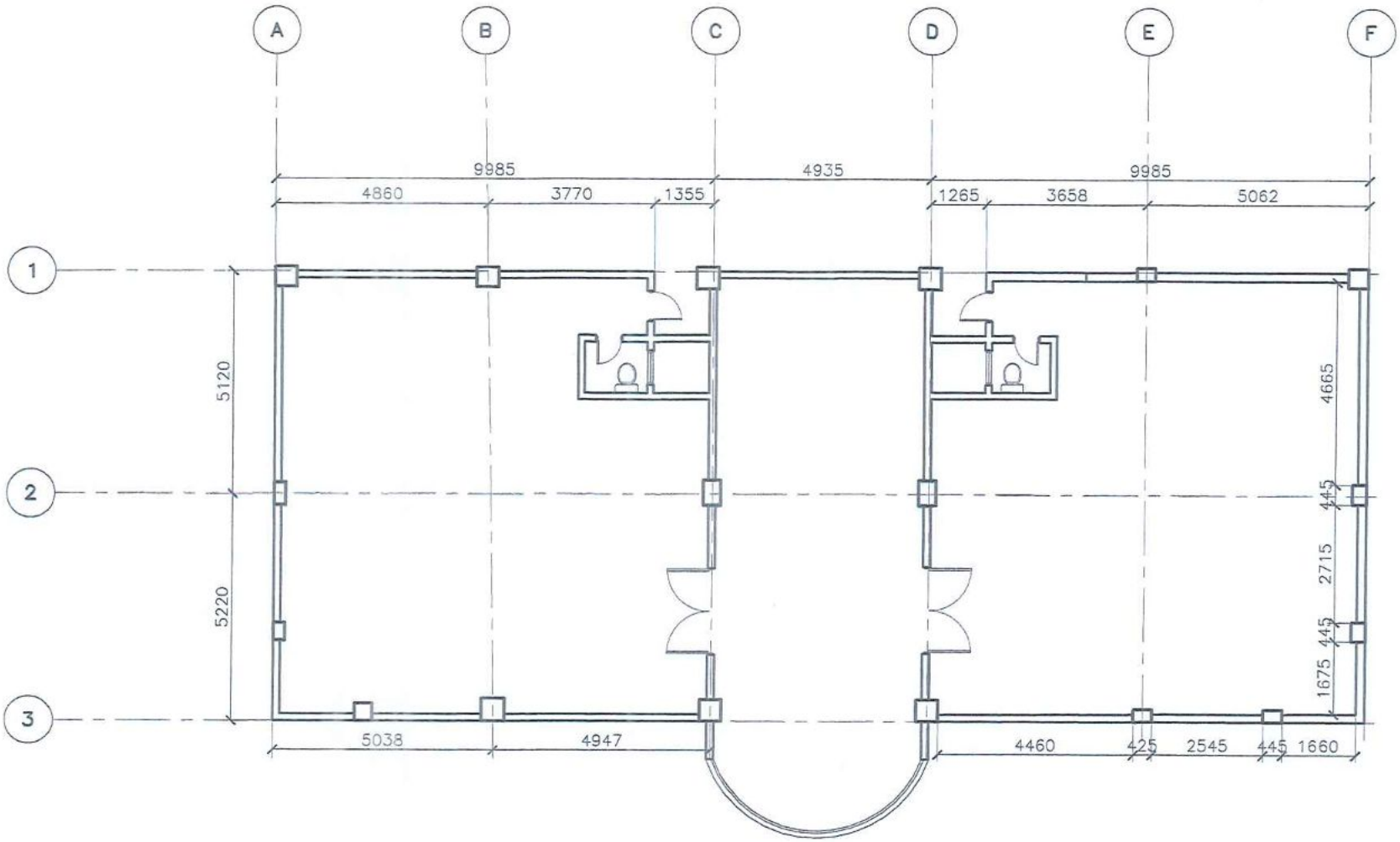


IAGS BUILDING

A / A-2 EXISTING ROOF DECK

SCALE 1:100

| ARCHITECT: | PROJECT TITLE | PLANNED BY: | REVIEWED BY: | RECOMMENDING APPROVAL | APPROVED BY: | SHEET CONTENT: | SHEET # |
|---|---|---|---|---|---|---|---|
| | FABRICATION AND INSTALLATION OF NEW TRUSSES AND ROOFING WITH ENCLOSURE AT INTERNATIONAL AFFAIRS AND GRADUATE SCHOOL BUILDING (IAGS) | AR. JOHNRICK S. OBLENA, uap<br>ARCHITECT | | ENGR. MELVIN A. MAKIPAGAY<br>DIRECTOR, PROJECT MANAGEMENT OFFICE | FREDERICK T. VILLA, DT<br>UNIVERSITY PRESIDENT | EXISTING ROOF DECK | A-2 |
| PRC # :<br>PTR # :<br>PLACE ISSUED : | TIN # :<br>DATE ISSUED : | PRC # : 0004006<br>PTR # : 8046583<br>PLACE ISSUED : SAMPALOC, QUE. | TIN # : 0070718110000<br>DATE ISSUED : 03/08/2006<br>UAP/VPOA, 0 043633 071425 | PRC # :<br>PTR # :<br>PLACE ISSUED : | TIN # :<br>DATE ISSUED : | | |
| | ADDRESS: SLSU MAIN CAMPUS, LUCBAN, QUEZON | | | | | | |

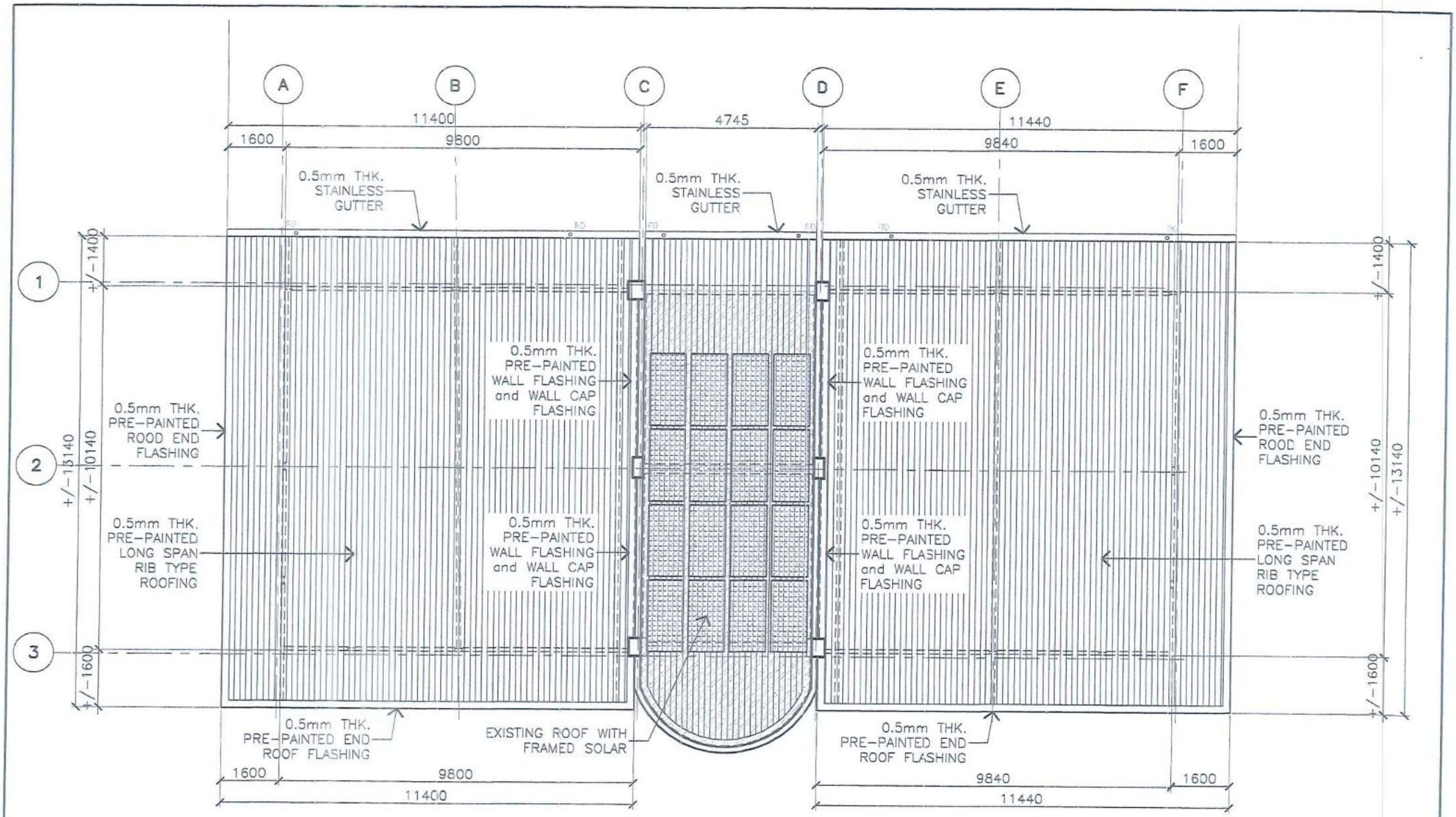


IAGS BUILDING

A
A-3

# ROOF PLAN

SCALE 1:100

| ARCHITECT: | PROJECT TITLE | PLANNED BY: | REVIEWED BY: | RECOMMENDING APPROVAL: | APPROVED BY: | SHEET CONTENT: | SHEET # |
|---|---|---|---|---|---|---|---|
| | FABRICATION AND INSTALLATION OF NEW TRUSSES AND ROOFING WITH ENCLOSURE AT INTERNATIONAL AFFAIRS AND GRADUATE SCHOOL BUILDING (IAGS) | AR. JOHNRICK S. OBLENA, uap<br>ARCHITECT | | ENGR. MELVIN A. MAKIPAGAY<br>DIRECTOR, PROJECT MANAGEMENT OFFICE | FREDERICK T. VILLA, DT<br>UNIVERSITY PRESIDENT | ROOF PLAN | A-3 |
| PRC # :<br>PTR # :<br>PLACE ISSUED : | TIN # :<br>DATE ISSUED : | ADDRESS: SLSU MAIN CAMPUS, LUCBAN, QUEZON | PRC # :<br>PTR # :<br>PLACE ISSUED : | TIN # :<br>DATE ISSUED : | | | |

# CONSTRUCTION NOTES:

## A. GENERAL

## STEEL NOTES:

1. ALL STRUCTURAL STEEL SHAPES SHALL CONFORM TO STD. REQUIREMENTS OF AISC FOR ASTM A36 STEEL
2. ALL COLD FORMED STEEL SHAPES SHALL CONFORM TO STD. REQUIREMENTS OF AISI FOR JIS G3141 SPCC
3. ALL WELDS SHALL CONFORM WITH AWS STD.
4. CONNECTORS
   BOLTS ASTM A307 OR ASTM A325 AS SPECIFIED
   WELDS E60XX ELECTRODE

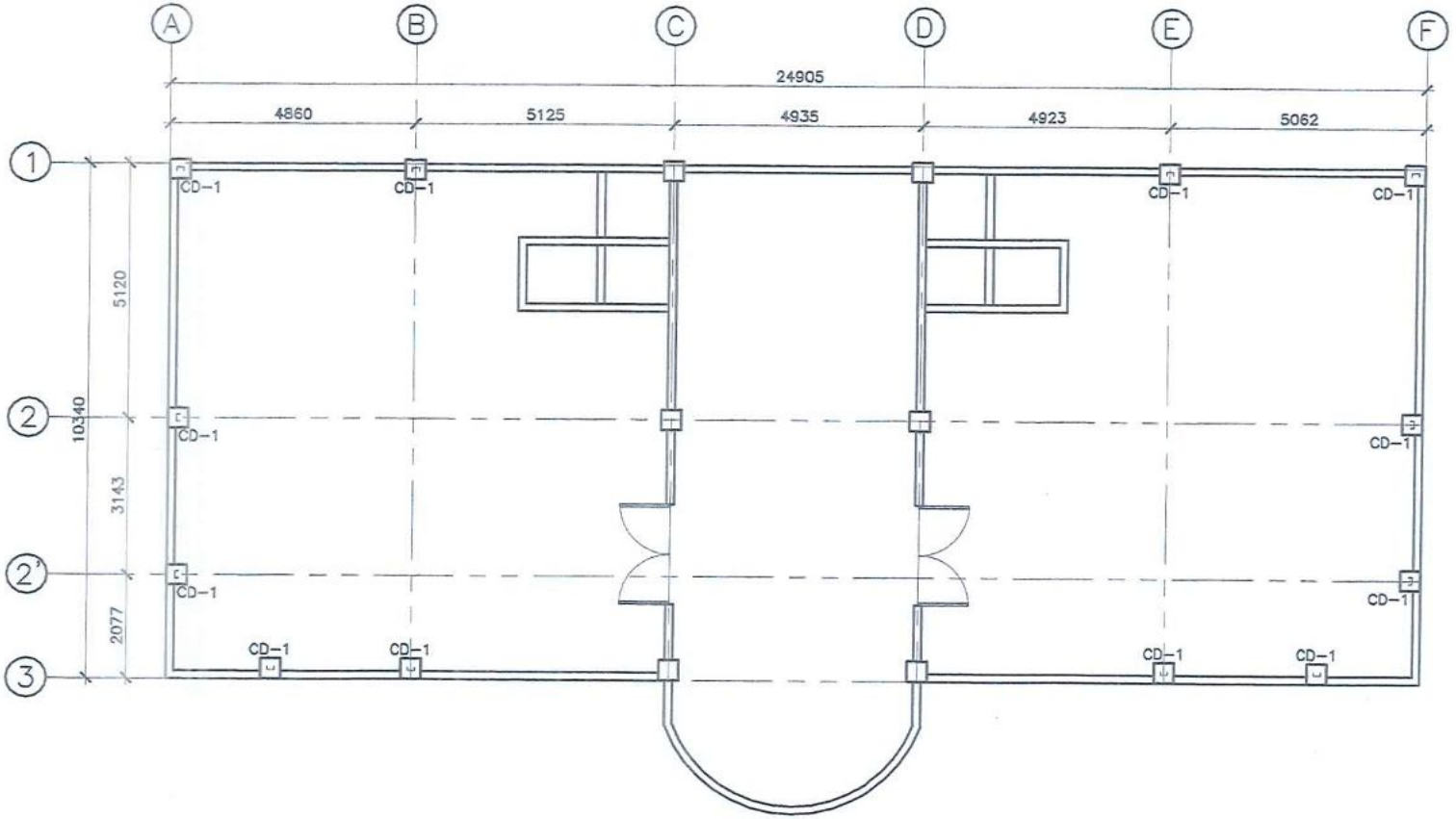


## ROOF DECK COLUMN KEY PLAN

SCALE: 1:100M

| | | | | | | | |
|---|---|---|---|---|---|---|---|
| CIVIL/STRUCTURAL ENGINEER: | PROJECT TITLE: | PLANNED BY: | REVIEWED BY: | RECOMMENDING APPROVAL: | APPROVED BY: | SHEET CONTENT: | SHEET NO. |
| | FABRICATION AND INSTALLATION OF NEW TRUSSES AND ROOFING WITH ENCLOSURE AT INTERNATIONAL AFFIARS AND GRADUATE SCHOOL BUILDING (IAGS) | ENGR. JOEL E. MORALES<br>PROJECT DEVELOPMENT OFFICER I | ENGR. MARK KEVIN A. MAKIPAGAY<br>PROJECT DEVELOPMENT OFFICER II | ENGR. MELVIN A. MAKIPAGAY<br>DIRECTOR, PROJECT MANAGEMENT OFFICE | FREDERICK T. VILLA, DT<br>UNIVERSITY PRESIDENT | | |
| | ADDRESS: SLSU MAIN CAMPUS, LUCBAN, QUEZON | | | | | | |

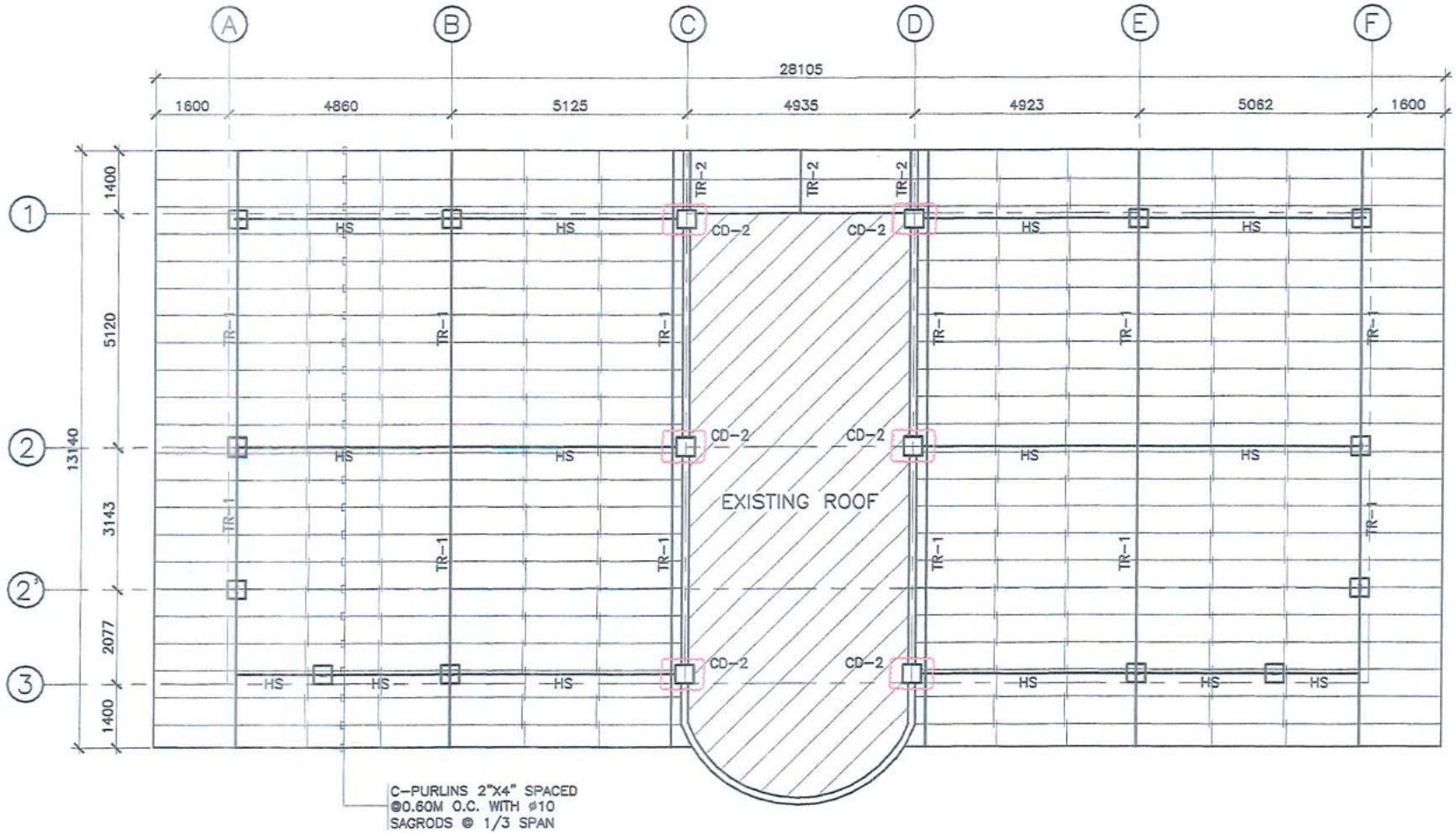


# ROOF FRAMING PLAN

SCALE: 1:100M

| CIVIL/STRUCTURAL ENGINEER: | PROJECT TITLE: | PLANNED BY: | REVIEWED BY: | RECOMMENDING APPROVAL: | APPROVED BY: | SHEET CONTENT: | SHEET NO. |
|---|---|---|---|---|---|---|---|
| | FABRICATION AND INSTALLATION OF NEW TRUSSES AND ROOFING WITH ENCLOSURE AT INTERNATIONAL AFFIARS AND GRADUATE SCHOOL BUILDING (IAGS) | ENGR. JOEL E. MORALES<br>PROJECT DEVELOPMENT OFFICER I | ENGR. MARK KEVIN A. MAKIPAGAY<br>PROJECT DEVELOPMENT OFFICER II | ENGR. MELVIN A. MAKIPAGAY<br>DIRECTOR, PROJECT MANAGEMENT OFFICE | FREDERICK T. VILLA, DT<br>UNIVERSITY PRESIDENT | | |

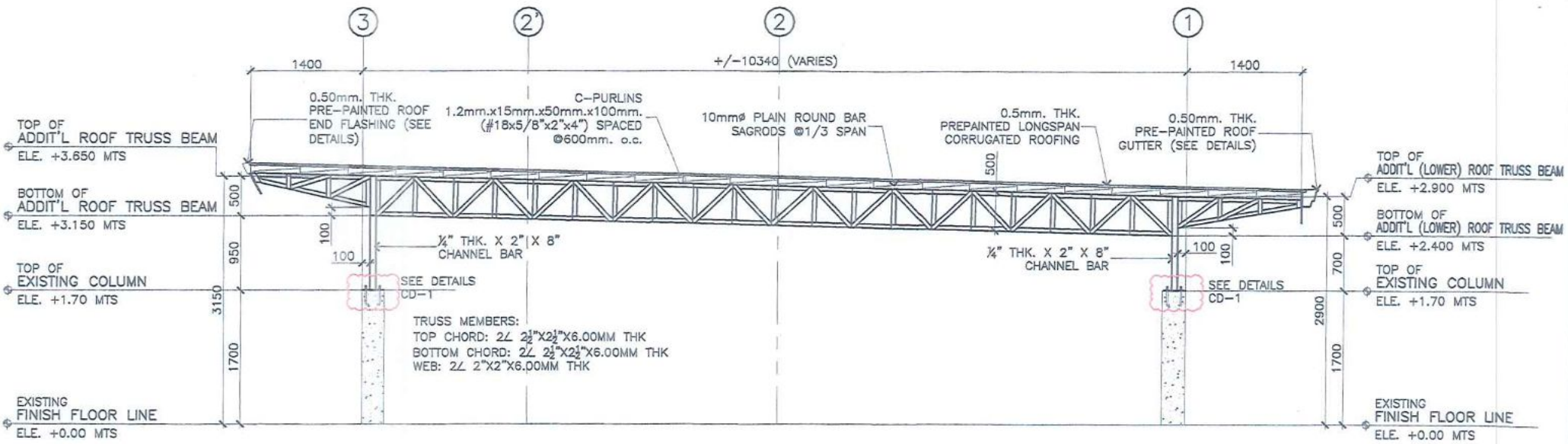


## TRUSS TYPICAL DETAIL (TR-1)

SCALE: 1:50M

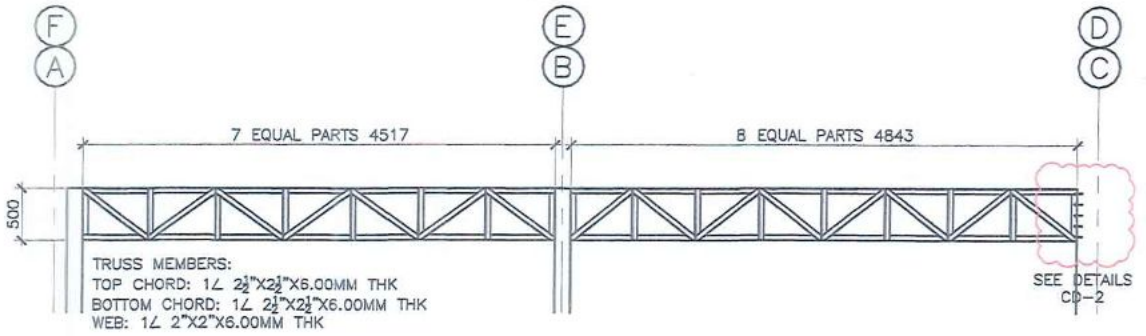


## HORIZONTAL STRUT TYPICAL DETAIL (HS)

SCALE: 1:50M

| CIVIL/STRUCTURAL ENGINEER: | PROJECT TITLE: | PLANNED BY: | REVIEWED BY: | RECOMMENDING APPROVAL: | APPROVED BY: | SHEET CONTENT: | SHEET NO. |
|---|---|---|---|---|---|---|---|
| | FABRICATION AND INSTALLATION OF NEW TRUSSES AND ROOFING WITH ENCLOSURE AT INTERNATIONAL AFFIARS AND GRADUATE SCHOOL BUILDING (IAGS) | ENGR. JOEL E. MORALES<br>PROJECT DEVELOPMENT OFFICER I | ENGR. MARK KEVIN K. MAKIPAGAY<br>PROJECT DEVELOPMENT OFFICER II | ENGR. MELVIN A. MAKIPAGAY<br>DIRECTOR, PROJECT MANAGEMENT OFFICE | FREDERICK T. VILLA, DT<br>UNIVERSITY PRESIDENT | | |

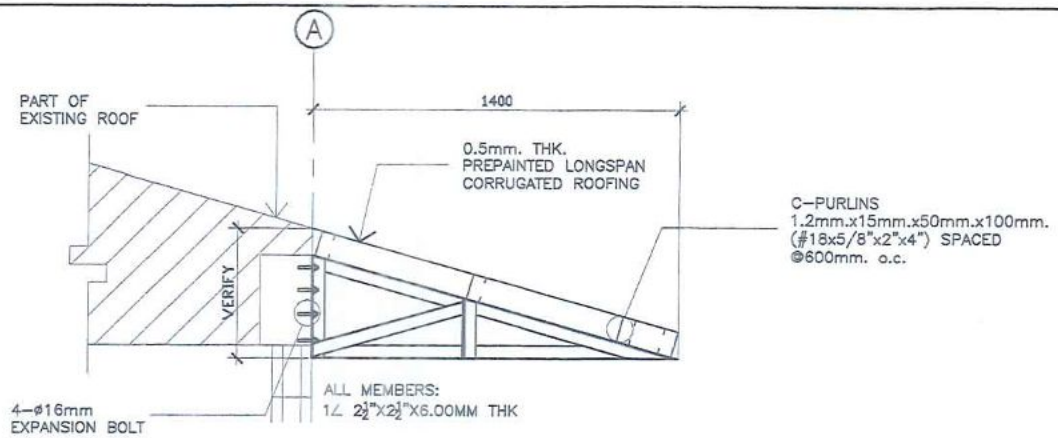


## TRUSS TYPICAL DETAIL (TR-2)

SCALE: 1:20M

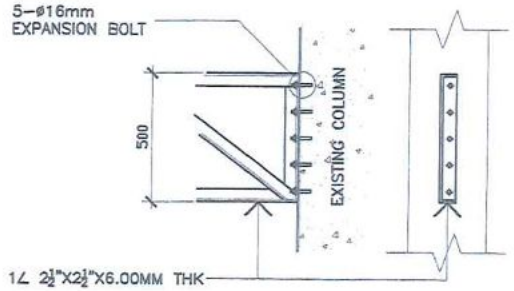


## CONNECTION DETAIL (CD-2)

SCALE: 1:20M

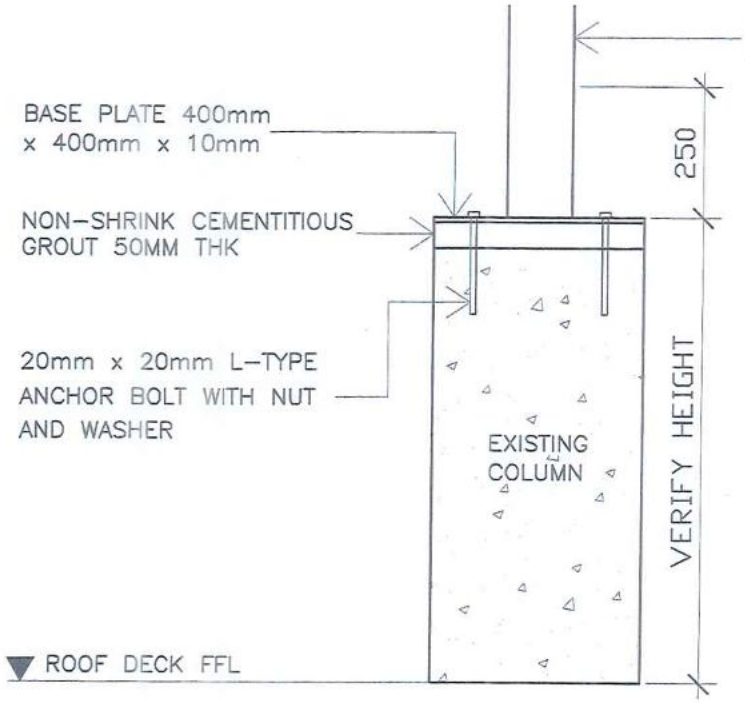


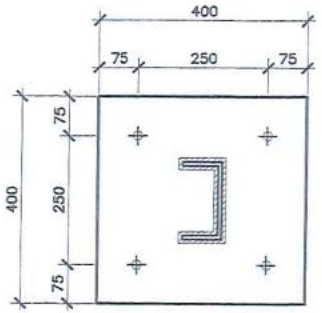


BASE PLATE
400mm x 400mm x 10mm

4 - 20mm x 20mm L-TYPE
ANCHOR BOLT WITH NUT
AND WASHER

## CONNECTION DETAIL (CD-1)

SCALE: 1:10M

| CIVIL/STRUCTURAL ENGINEER: | PROJECT TITLE: | PLANNED BY: | REVIEWED BY: | RECOMMENDING APPROVAL: | APPROVED BY: | SHEET CONTENT: | SHEET NO. |
|---|---|---|---|---|---|---|---|
| | FABRICATION AND INSTALLATION OF NEW TRUSSES AND ROOFING WITH ENCLOSURE AT INTERNATIONAL AFFIARS AND GRADUATE SCHOOL BUILDING (IAGS) | ENGR. JOEL E. MORALES<br>PROJECT DEVELOPMENT OFFICER I | ENGR. MARK KEVIN A. MAKIPAGAY<br>PROJECT DEVELOPMENT OFFICER II | ENGR. MELVIN A. MAKIPAGAY<br>DIRECTOR, PROJECT MANAGEMENT OFFICE | FREDERICK T. VILLA, DT<br>UNIVERSITY PRESIDENT | | |
| | ADDRESS: CLSU MAIN CAMPUS, LUSIANA, QUEZON | | | | | | |

# GENERAL NOTES:

ALL WORKS HEREUNDER SHALL CONFORM WITH THE RULES AND REGULATION OF THE LATEST EDITION OF THE PLUMBING CODE, NATIONAL BUILDING CODE, AND THE RULES AND REGULATION OF THE LOCAL ENFORCING AUTHORITY.

ALL WATER WASTE PIPE SHALL BE POLYVINYL CLORIDE PIPES SCHED 40 SIZE AS INDICATED ON THE PLANS AND SPECIFICATIONS.

NORMAL SIZE OF OUTLETS PIPE FROM SEPTIC TANK TO MAIN STREET SEWER LINE SHALL NOT BE LESS THAN 100 MM. DIAM. SHALL BE PROVIDED WITH 2% ADEQUATE NOMINAL SLOPE.

ALL MATERIALS / EQUIPMENT TO BE INSTALLED SHALL BE NEW AND FREE FROM ANY DEFECTS AND APPROVED AS TO LOCATION AND PURPOSE.

COORDINATE THE DRAWING WITH OTHER RELATED DRAWINGS AND SPECIFICATIONS. THE ENINEEER SHALL BE NOTIFIED IMMEDIATELY OF ANY DISCREPANCY FOUND THEREIN.

PIPES SHALL BE INSTALLED AS INDICATED. ANY RELOCATION REQUIRE FOR PROPER EXECUTION OF OTHER TRADES SHALL BE WITH PRIOR APPROVAL OF THE ENGINEER.

PROPOSED SANITARY UTILITIES SHALL CONFORMED TO THE ACTUAL LOCATION DEPTH AND INVERT ELEVATION OF ALL EXISTING PIPES AND STRUCTURES AS VERIFIED BY THE CONTRACTOR.

THE CONTRACTOR SHALL VERIFY ALL EXISTING UTILITIES AT SITE AND COORDINATE THE WORK WITH THE SEWER LINE EFFLUENT DISPOSAL POINT AND WASTE LINE SERVICE CONNECTING POINT.

ALL FIXTURES SHALL BE EVENTED, UNLESS OTHERWISE INDICATED IN THE DRAWINGS.

# PLUMBING NOTES:

1. ALL FLOOR DRAINS @ GROUND FLOOR SHALL BE 3"ø PVC W/ P-TRAP
2. ALL BRANCH VENT SHALL BE 2"ø PVC PIPE SERIES 600.
3. ALL FLOOR DRAINS @ SECOND FLOOR SHALL BE 100mm x 100mm.

# NOTES:

1. VERIFY THE SLOPE OF DOWNSPOUT @ ELEVATION

# L E G E N D :

| | |
|---|---|
| DP | DRAIN PIPE |
| AD | AREA DRAIN |
| CB | CATCH BASIN |
| CO | CLEAN OUT |
| FCO | FLOOR CLEAN OUT |
| DS | DOWNSPOUT |
| RD | ROOF DRAIN |

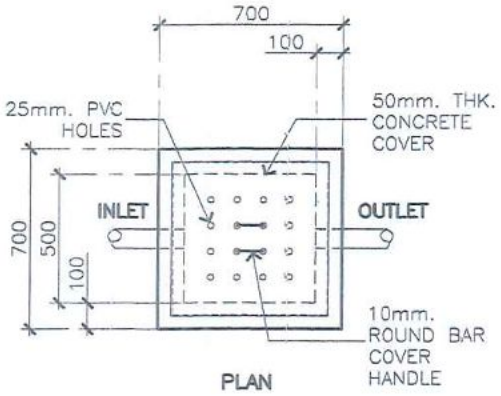


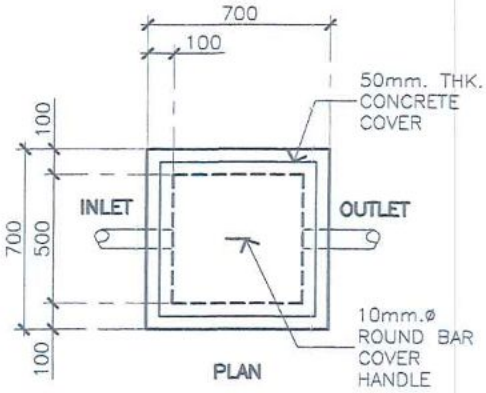


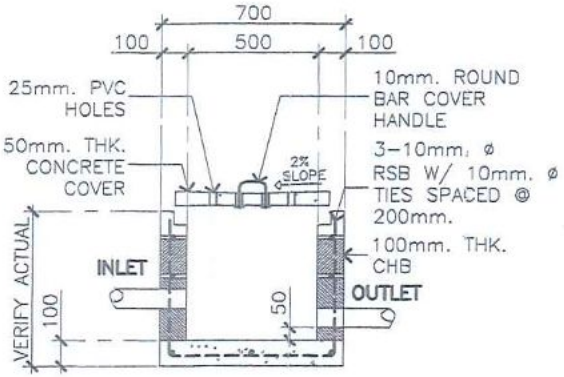


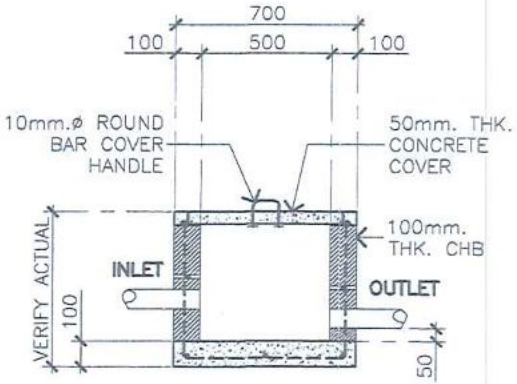


A P-1 AD AREA DRAIN DETAIL
SCALE 1:20M

A P-1 CB CATCH BASIN DETAIL
SCALE 1:20M

| SANITARY ENGINEER / MASTER PLUMBER | PROJECT TITLE | PLANNED BY: | REVIEWED BY: | RECOMMENDING APPROVAL: | APPROVED BY: | SHEET CONTENT: | SHEET # |
|---|---|---|---|---|---|---|---|
| | FABRICATION AND INSTALLATION OF NEW TRUSSES AND ROOFING WITH ENCLOSURE AT INTERNATIONAL AFFAIR AND GRADUATE SCHOOL BUILDING (IAGS)<br>ADDRESS: SLSU MAIN CAMPUS, LUCBAN, QUEZON | AR. JOHNRICK S. OBLENA, uap<br>ARCHITECT | | ENGR. MELVIN A. MAKIPAGAY<br>DIRECTOR, PROJECT MANAGEMENT OFFICE | FREDERICK T. VILLA, DT<br>UNIVERSITY PRESIDENT | GENERAL NOTES<br>AREA DRAIN DETAILS<br>CATCH BASIN DETAILS | P-1 |

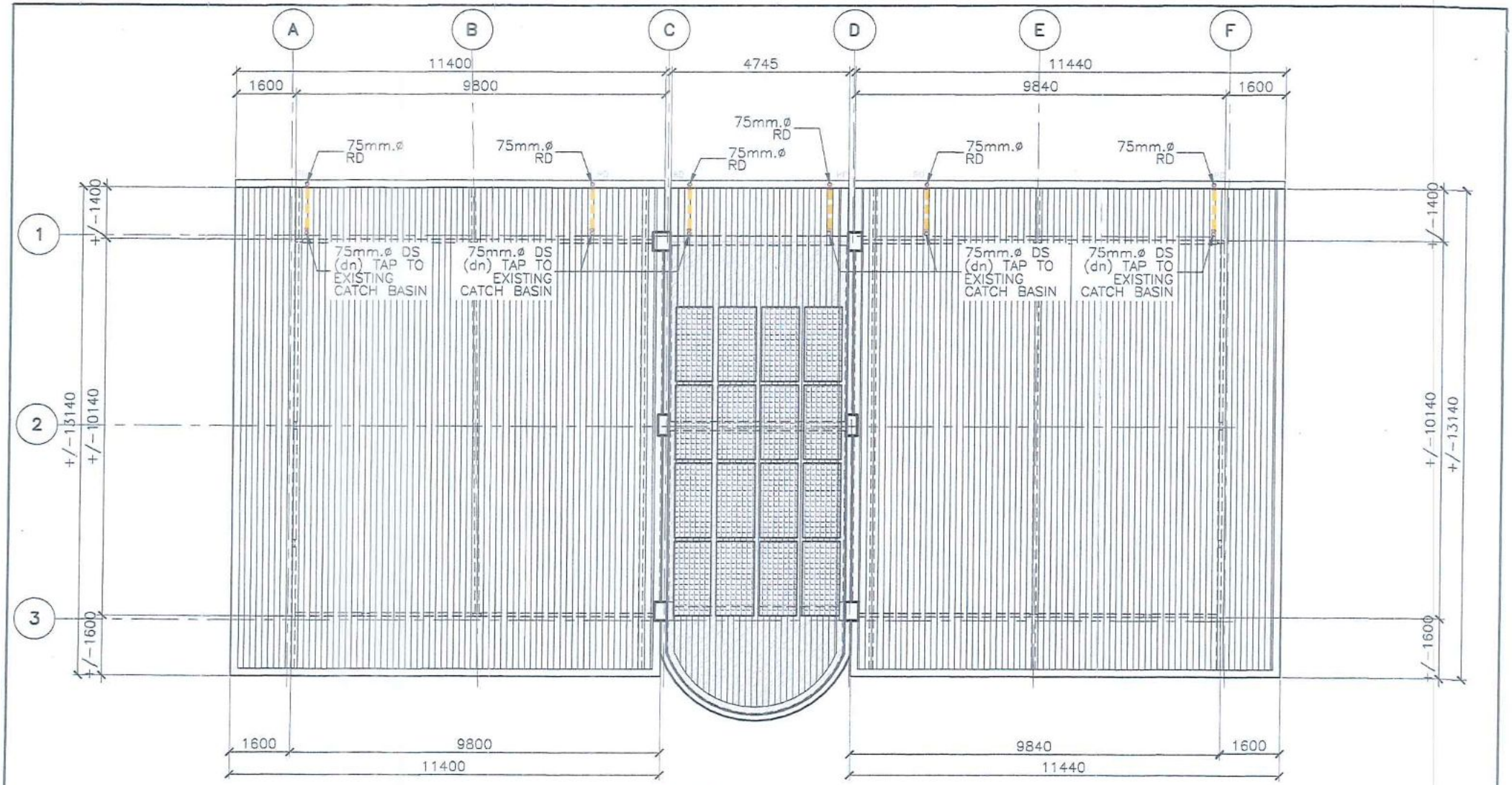


IAGS ROOF PLAN

A P-2

# STORM DRAINAGE LAYOUT

SCALE 1:100

| | | | | | | |
|---|---|---|---|---|---|---|
| SANITARY ENGINEER / MASTER PLUMBER | PROJECT TITLE | PLANNED BY: | REVIEWED BY: | RECOMMENDING APPROVAL: | APPROVED BY: | SHEET CONTENT: / SHEET # |
| | FABRICATION AND INSTALLATION OF NEW TRUSSES AND ROOFING WITH ENCLOSURE AT INTERNATIONAL AFFAIR AND GRADUATE SCHOOL BUILDING (IAGS) | AR. JOHNRICK S. OBLENA, uap<br>ARCHITECT | | ENGR. MELVIN A. MAKIPAGAY<br>DIRECTOR, PROJECT MANAGEMENT OFFICE | FREDERICK T. VILLA, DT<br>UNIVERSITY PRESIDENT | STORM DRAINAGE LAYOUT<br>P-2 |